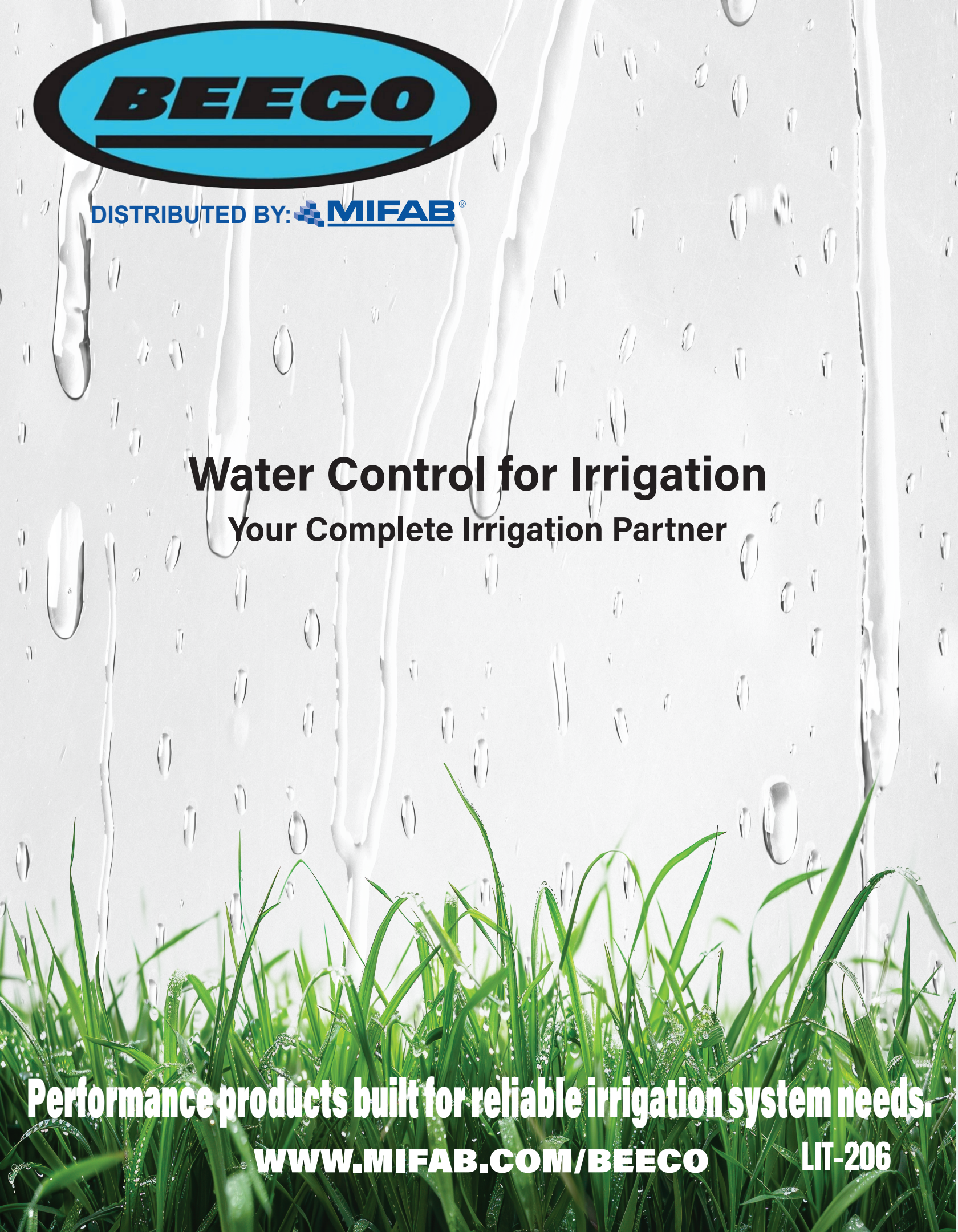
BEECO
DISTRIBUTED BY: MIFAB®
Water Control for Irrigation
Your Complete Irrigation Partner
Performance products built for reliable irrigation system needs.
WWW.MIFAB.COM/BEECO
LIT-206

DISTRIBUTED BY: MIFAB

Trusted Irrigation Performance Built on Generations of Expertise

For decades, BEECO® has protected water systems with durable, efficient backflow preventers. Now, distributed by MIFAB®, we're raising the standard for irrigation with unmatched product availability, customer support, and engineering expertise.

From residential landscaping, commercial irrigation, golf courses and athletic fields to agriculture and parks & recreation, BEECO® delivers the reliable flow control irrigation professionals demand. Our backflow preventers, pressure reducing valves, and automatic control valves are built for efficiency, easy maintenance, and long service life in the field.

In addition, MIFAB® continues to lead the industry with irrigation ready products and drains. Products such as yard hydrants, roof drains, trench drains, wall hydrants, floor drains, and gloves make MIFAB and BEECO your one stop shop for all your irrigation and landscape needs.

Choose BEECO® and MIFAB for your irrigation projects—trusted performance, proven innovation, and water control solutions that stand the test of time.

Markets Served:

- *Municipal Irrigation & Water Utilities*
- *Agriculture & Farm Irrigation Systems*
- *Golf Courses & Athletic Fields*
- *Landscape & Turf Irrigation Contractors*

TABLE OF CONTENTS

PAGE 1-2	BACKFLOW PREVENTERS
PAGE 3	PRESSURE REDUCING VALVES
PAGE 4	CHECK VALVES, STRAINERS, & DIELECTRIC UNIONS
PAGE 5	SHUT OFF VALVES
PAGE 6	AIR RELEASE VALVES
PAGE 7-9	MIFAB® IRRIGATION READY PRODUCTS
PAGE 10-11	MIFAB® TRENCH DRAIN SOLUTIONS

WWW.MIFAB.COM/BEECO

The BEECO® Series of Backflow Preventers provide essential protection for irrigation systems by preventing hazardous pollutants, fertilizers, and contaminants from entering the potable water supply during backpressure or backsiphonage events. Reliable backflow prevention is critical to maintaining water safety and protecting system integrity.

BEECO® backflow assemblies are built for durability, easy testing, and long service life in the field. As the first to introduce an approved testable backflow preventer in 1945, BEECO® continues to lead with proven solutions that safeguard water quality, support efficient irrigation practices, and keep systems running at peak performance.

DISTRIBUTED BY: MIFAB

BACK FLOW PREVENTERS



Barracuda (2 ½"-8")
Double Check Backflow Preventer with Stainless Steel body

SPEC SHEET



Barracuda (2 ½"-8")
Reduced Pressure Zone Backflow Preventer with Stainless Steel body.

SPEC SHEET



FDC (½ "-2")
Double Check Backflow Preventer

SPEC SHEET



FDC (2 ½"-10")
Double Check Backflow Preventer

SPEC SHEET



FRP (½"-2")
Reduced Pressure Zone Backflow Preventer

SPEC SHEET

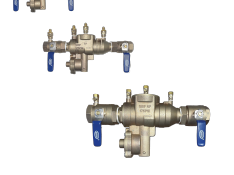

FRP (2 ½"-10")
Reduced Pressure Zone Backflow Preventer

SPEC SHEET

ASSE IAPMO U.P.C. USC APPROVED

*USC APPROVED ARE: 1/2"- 8" DOUBLE CHECK BACKFLOW PREVENTERS (STAINLESS STEEL BODY 2 1/2"- 8") 2 1/2" - 8" REDUCED PRESSURE ZONE BACKFLOW PREVENTERS (STAINLESS STEEL BODY)

BEECO

DISTRIBUTED BY: MIFAB

BACK FLOW PREVENTERS



HBVB
Hose Connection
Vacuum Breaker

SPEC SHEET



PVB
Pressure Vacuum
Breaker

SPEC SHEET



ASVB
Anti-Siphon
Vacuum Breaker

SPEC SHEET



DC
In Line Dual
Check Valve

SPEC SHEET

ASSE IAPMO UPC USC APPROVED

*USC APPROVED ARE: 1/2"- 8" DOUBLE CHECK BACKFLOW PREVENTERS (STAINLESS STEEL BODY 2 1/2"- 8") 2 1/2" - 8" REDUCED PRESSURE ZONE BACKFLOW PREVENTERS (STAINLESS STEEL BODY)

"MIFAB's plant is huge and they always have everything ready and available for us."
-Dan Thomas of Ben Thomas & Associates, Shade Gap,PA

Design and dimensions are subject to modification.

BEECO, Inc. 1321 West 119th Street, Chicago, Illinois 60643-5109, USA

Toll Free (800) 465-2736, Fax: (773) 341-3049
sales@mifab.com Canada Toll Free (800)387-3880

BEECO® Pressure Reducing Valves are designed to deliver precise and dependable pressure control in even the most demanding irrigation environments. By reducing high inlet pressure and regulating it to the requirements of the system, these valves help ensure consistent water flow at the most efficient pressures needed.

DISTRIBUTED BY: MIFAB®

Constructed from durable materials and field-proven designs, BEECO® PRVs are trusted by irrigation designers for their accuracy, by contractors for their ease of installation, and by end users for their long service life with minimal maintenance. Each valve is engineered to maximize system protection while optimizing performance, making BEECO® the smart choice for efficient, sustainable, and reliable irrigation solutions.

PRESSURE REDUCING VALVES



ACV-HF-T-PR
Automatic Control Valve,
Pressure Reducing

SPEC SHEET



PRV-C (1/2”-1”)
Water Pressure Reducing Valves,
Composite Bonnet

SPEC SHEET

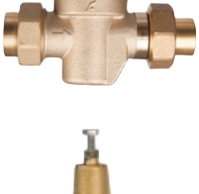

PRV-C (1 1/4”-2”)
Water Pressure Reducing Valves,
Bronze Bonnet

SPEC SHEET



JK - PRV Jumper kit

SPEC SHEET



PRV-F (3/4”-1”)
Water Pressure Reducing Valves
(25AUB Replacement)

SPEC SHEET

Every BEECO® Automatic Control Valve is hydrostatically tested to ensure peak performance and has standard features not found in other Automatic Control Valves

DISTRIBUTED BY: MIFAB®

CHECK VALVES, STRAINERS & DIELECTRIC UNIONS

BEECO® check valves, strainers, and dielectric unions are essential components for protecting and optimizing irrigation systems. Check valves ensure reliable one-way flow, preventing reverse water movement that can compromise efficiency and damage equipment. Strainers safeguard sprinklers, emitters, and control valves by filtering out debris and sediment often present in irrigation water sources such as ponds, lakes, or municipal supplies. Dielectric unions provide a safe, long-lasting connection between dissimilar metals, preventing galvanic corrosion in underground or exposed piping common to irrigation installations. Together, these products extend the life of irrigation systems, reduce costly maintenance, and help maintain consistent, dependable water delivery across residential and commercial irrigation, golf courses, athletic fields, agriculture, and municipal landscapes.



BCV - Ball Check Valve

SPEC SHEET



CV - Silent Check Valve

SPEC SHEET



STR (1/2”-2”)
Bronze Strainer
(F.I.P. x F.I.P. and SWT. x SWT.)

SPEC SHEET



STR-PC (2”-12”)
Ductile Iron
Powder Coated Flanged Strainer

SPEC SHEET



DU (DIELECTRIC UNIONS)
Corrosion-resistant connections that protect irrigation piping from galvanic wear and extend system life

SPEC SHEET

Design and dimensions are subject to modification.

BEECO, Inc. 1321 West 119th Street, Chicago, Illinois 60643-5109, USA

Toll Free (800) 465-2736, Fax: (773) 341-3049
sales@mifab.com Canada Toll Free (800)387-3880

BEECO® Shut-Off Valves are a critical component in irrigation systems, providing reliable isolation and flow control when systems require maintenance, seasonal shutdown, or emergency service. Designed for durability and ease of operation, these valves allow contractors, grounds crews, and municipalities to quickly stop water flow to specific zones, minimizing downtime and protecting equipment during repairs or upgrades.

Built to withstand constant use and outdoor environments, BEECO® shut-off valves ensure long-term performance and simplify water management in any irrigation application.

DISTRIBUTED BY: MIFAB

SHUT OFF VALVES



GV-FXF-NRS
Flanged by Flanged
NRS Gate Valves

SPEC SHEET



BV-IPS-BRZ
Bronze Ball Valve

SPEC SHEET



BV-SWT-BRZ
Solder Connections
Bronze Ball Valve

SPEC SHEET

BEECO

DISTRIBUTED BY: MIFAB

AIR RELEASE VALVES

BEECO® Air Release Valves are engineered to efficiently eliminate trapped air from pressurized piping systems — ensuring smooth flow, accurate system performance, and protection against pressure surges. Designed for reliability in waterworks, irrigation, and industrial applications, these valves help prevent costly damage caused by air pockets and vacuum conditions. Built with precision and durability in mind, BEECO® Air Release Valves are easy to install, low maintenance, and trusted by professionals who demand performance in every detail.



AV-P-A
Air Release Valve

SPEC SHEET



AV-P-K
Air and Vacuum Valve

SPEC SHEET



AV-P-K-A
Combination Air Release and Vacuum Valve

SPEC SHEET

"The BEECO Plastic Air Valves provide dependable service at a competitive price, without the weight and corrosion concerns associated with metal valves."

-William Dozier, CEO, Pioneer Supply Moore, OK

Design and dimensions are subject to modification.

BEECO, Inc. 1321 West 119th Street, Chicago, Illinois 60643-5109, USA

WWW.MIFAB.COM/BEECO

Toll Free (800) 465-2736, Fax: (773) 341-3049

sales@mifab.com Canada Toll Free (800)387-3880

F300



Adjustable Area Drain with anchor flange and 7″ Round, Adjustable, Heelproof Strainer. 1/2″ Trap Seal Primer tapping included with all bodies.

Check out MIFAB's CLPB for more options

MIFAB® drainage products are engineered to support the full spectrum of irrigation applications. Our durable area drains provide safe, heel-proof surface water collection in landscapes, golf courses, athletic fields, and parks, ensuring consistent drainage and long service life. For structures tied into irrigation networks, MIFAB® roof drains deliver reliable rooftop water removal with easy-to-install replacement models that protect buildings while integrating seamlessly with drainage systems. To safeguard underground infrastructure, our cast iron sewer and water boxes secure valve and connection access points, shielding them from debris, weather, and tampering while allowing for easy maintenance. Together, these solutions help irrigation professionals manage water more effectively, protect system performance, and extend the life of their installations.

C1100-S



Square cleanout top engineered for commercial and industrial drainage systems, combining a professional finish with easy access for maintenance. Built to withstand heavy use, it provides a reliable solution for maintaining system efficiency.

RFD



Replacement roof drain manufactured from 16 gauge steel with an acid resistant powder epoxy coating on bearing pan and funnel body. Furnished with poly dome strainer, dome receiver with integral gravel guard and gasket seal.

MI-SCOV



Series of lacquered cast iron sewer box lid and cover. Specify size (either 8" or 10" diameter) and markings on cover (either Plain, Water or Sewer).

MIFAB®

MIFAB Irrigation Solutions — From Water Access to Drainage Management

MIFAB® offers a complete line of hydrants, boxes, drains, and accessories designed to support irrigation professionals across residential irrigation, agriculture, turf, golf, parks, municipal, and commercial landscapes.

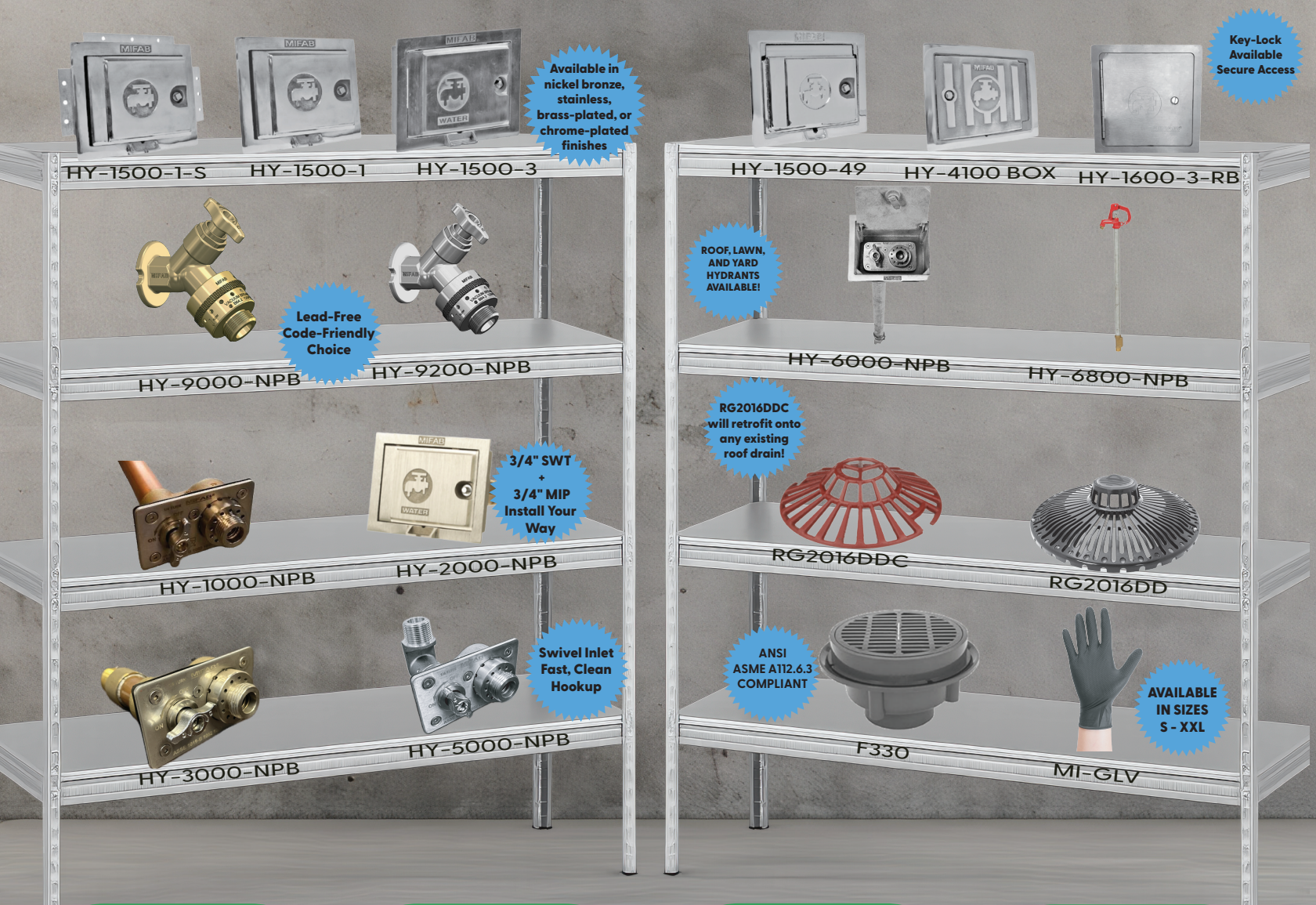

Wall & Ground Hydrants

Non-freeze, moderate climate, and narrow wall options for reliable water access, plus roof hydrants and wall faucets with vacuum breakers.

Drainage Solutions

Area drains, roof drains, and water boxes built for tough irrigation conditions, with RoofGuard technology to prevent clogging and standing water.

Hydrant Accessories

Hydrant boxes in nickel bronze, stainless steel, and polished finishes, plus repair kits, vacuum breakers, and keys for simplified maintenance.

Additional Parts & Protection

Cast iron sewer and water boxes protect underground connections, while diamond-grip nitrile gloves keep contractors safe on the job.

Design and dimensions are subject to modification.

BEECO, Inc. 1321 West 119th Street, Chicago, Illinois 60643-5109, USA

WWW.MIFAB.COM/BEECO

Toll Free (800) 465-2736, Fax: (773) 341-3049

sales@mifab.com Canada Toll Free (800)387-3880

Irrigation-Ready Floor Drains

Top Set Adjustable Drains

MIFAB's Top Set floor drains are engineered for performance and convenience. With up to 1" of vertical adjustment and three integral leveling screws, they eliminate the need for shims and ensure a precise, flush fit every time. Their vandal-resistant design, durable cast-iron clamps, and standard ½" trap seal primer tapping make them reliable for long-term irrigation and outdoor use.

Retro-Fit Solutions

For existing systems, MIFAB's retrofit rings and grates fit into popular competitor floor drains, giving irrigation projects an easy upgrade without full system replacement. Adjustable side-to-side and vertically, they meet finished floor heights with minimal effort.

Wood Deck Applications

Specialized Top Set drains with wood deck flanges are available for irrigation systems installed on raised decks. These drains maintain durability while providing a clean and reliable solution for unique outdoor landscapes.

Material & Finish Options

Choose from nickel bronze or stainless steel strainers in 5", 6", 7", or 8" diameters. Multiple outlet connections—PVC, ABS, No-Hub cast iron, or Push-On cast iron—allow flexibility for a wide range of irrigation installations.



F220-30-TS | F220-TS | F100-30-TS | F100-TS | F100-C-30-TS | F100-C-TS | F220-30-TS-WF | F220-TS-WF

Benefits at a Glance

- Industry-standard load class ratings
- ADA-friendly, heel-proof grate options
- Backed by MIFAB's in-house engineering expertise
- Simple adjustment—no coring plug or extra strainer needed
- Protects against sediment and vandalism with optional accessories



CRTS-PRT-1
TOP RIM ONLY



CRTS-PRU-A
UNIVERSAL RING ONLY

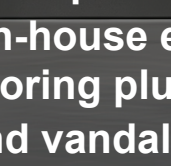

CRTS5-1

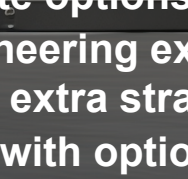

CRTOS-1



CRTSS5-1
PATENT # 9,453,331

TRENCH DRAIN SOLUTIONS

MIFAB®

MIFAB's trench drain systems are designed with both performance and accessibility in mind. Our inclusive offering features a wide selection of ADA-compliant and heel-proof grates, available in various styles and materials to meet diverse project needs. All grates are tested and rated to the highest standards, meeting EN 1433 and ANSI A112.21.1M requirements, and offered in Load Classes A through F to ensure the right fit for any application. Backed by our in-house engineering team, we provide comprehensive support—from system selection and run layouts to Revit and BIM models—making your trench drain experience seamless from design through installation.

T250 CHANNEL BODY

Specification: MIFAB® Series T250, 2" Internal width, 3" deep, 48" long, non sloped channel with two 24" long HDPE grates. Channel is manufactured from gray UV-10 stabilized High Density Polyethylene (H.D.P.E.). Each channel has leveling legs for #4 rebar tie down and leveling. Channels have interlocking ends to connect to each other. 2" bottom socket outlet molded into every channel. 2" No Hub end outlet and end cap are available.

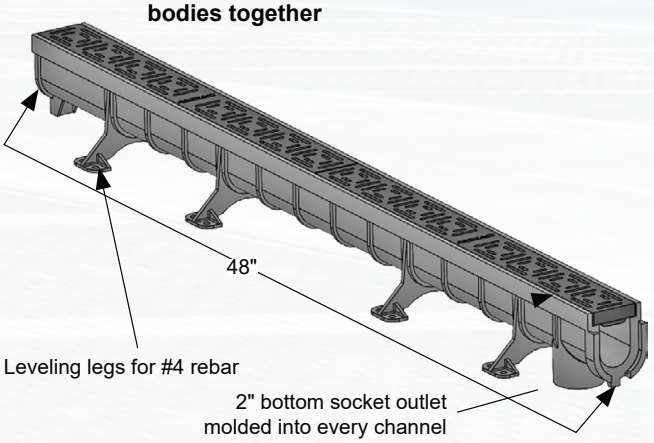

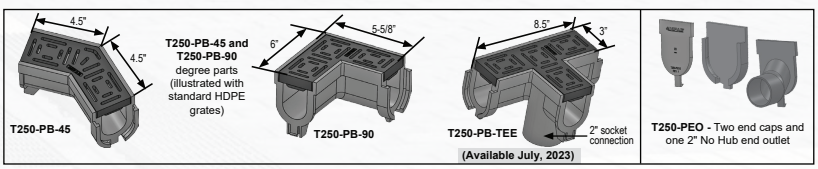



SCAN FOR SPEC. SHEET

Design and dimensions are subject to modification.

BEECO, Inc. 1321 West 119th Street, Chicago, Illinois 60643-5109, USA

WWW.MIFAB.COM/BEECO

Toll Free (800) 465-2736, Fax: (773) 341-3049

sales@mifab.com Canada Toll Free (800)387-3880

"ClipFix" and "ProFix" Grate System

Innovative CLIPFIX grate locking mechanism for plastic, ductile iron, galvanized and stainless steel grates (up to and including Load Class E). Innovative PROFIX grate locking mechanism for Load Class F ductile iron grates.



Specification: MIFAB® Series T300, 4" internal width, 4 3/4" deep, 39.40" (1 m) long, and 19.70" (1/2 m) channels are also available, non sloped trench drain system. Body is manufactured from Glass Fiber Reinforced Polyester (GRP).

Meets the Buy America Act

SCAN FOR SPEC. SHEET

T300 CHANNEL BODY

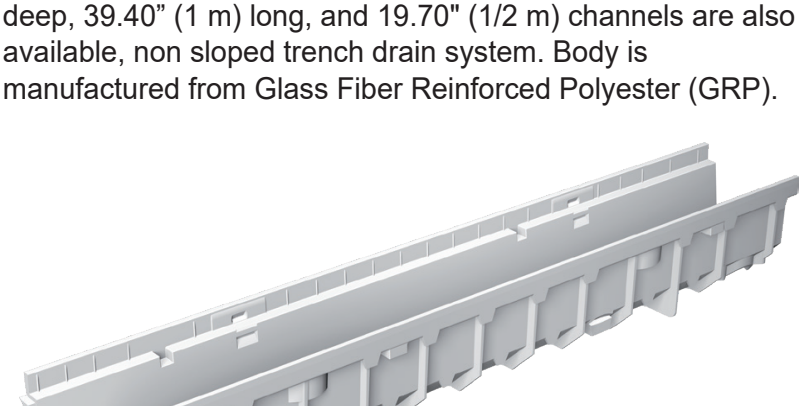

T300-CB420 Catch Basin



MI-FLEX-300, 400	T300-PBDS	T300-REB	T300-BO4	T300-PEO3	T300-PEC
					

For Our Complete range of products please visit www.mifab.com
Customer Service: (800) 465-2736

NOTES

MIFAB CATALOGS



MPB-2025-04-USA
SPECIFICATION DRAINAGE
(LIT-067)



CLPB-2025-04
LIGHT COMMERCIAL PRODUCTS
(LIT-048)



AD-2025-05-USA
ACCESS DOORS
(LIT-043)



BEECO-2025
BACKFLOW PREVENTERS, AND ACCESSORIES
(LIT-071)



NH-2025
NO HUB COUPLINGS
(LIT-044)



TDPC-2025-04
POLYMER CONCRETE TRENCH DRAINS
(LIT-076)



TD-2025-04
GRP AND STEEL TRENCH DRAINS
(LIT-046)



TDSD-2025-04
SHOWER DRAINS
(LIT-077)



TDSS-2025-04
STAINLESS STEEL TRENCH DRAINS
(LIT-072)



TD-2025-CONCRETE
GRP AND POLYMER CONCRETE PRODUCTS
(LIT-086)



C-PORT-2023
ROOFTOP RUBBER PIPE SUPPORTS
(LIT-047)

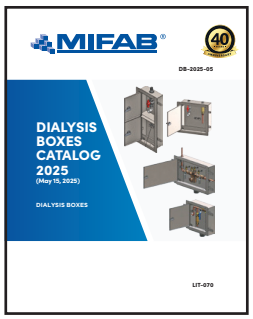

DB-2025-05
DIALYSIS BOXES
(LIT-070)

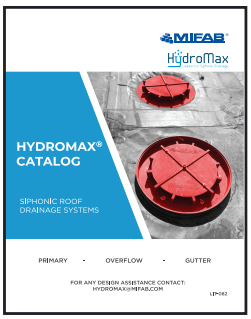

HYDROMAX
SIPHONIC DRAINAGE
(LIT-082)



INT-2025
INTERCEPTORS & ACID NEUTRALIZATION TANKS
(LIT-095)



TSP-2025
TRAP SEAL PRIMERS
(LIT-062)

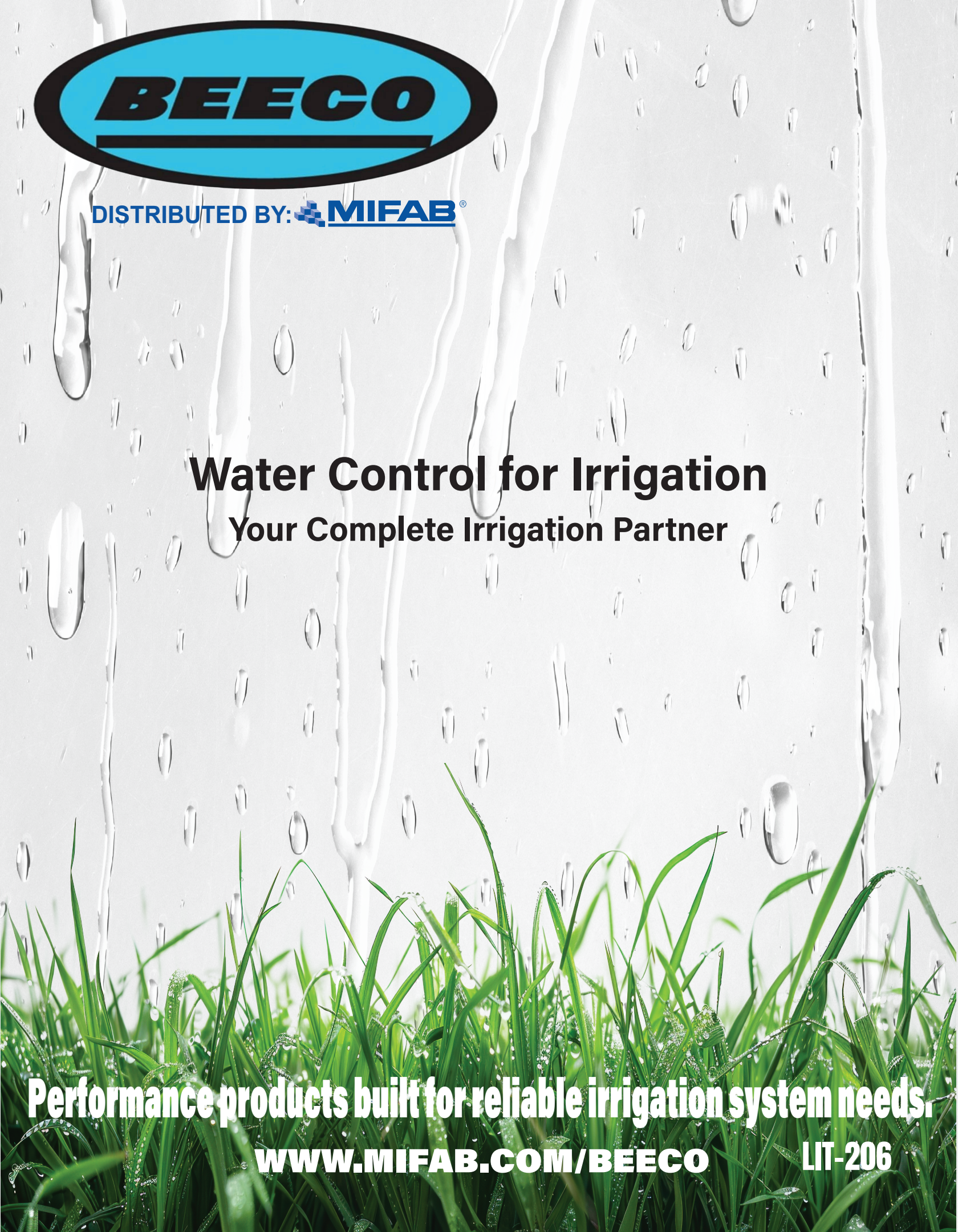
BEECO
DISTRIBUTED BY: MIFAB®
Water Control for Irrigation
Your Complete Irrigation Partner
Performance products built for reliable irrigation system needs.
WWW.MIFAB.COM/BEECO
LIT-206