Location: _____

# MIFAB® F1100-K — FLOOR DRAIN WITH RECESSED FLANGE FOR NON-MEMBRANE FLOOR AREAS

**Specification:** MIFAB® Series F1100-K-1 lacquered cast iron floor drain with anchor flange, weepholes, and "K" dome (specify material type) strainer. (For membrane floors, use MIFAB F1100-C-K Series.)

**Function:** Used in recessed areas and gutters and other non-membrane finished areas where debris build up occurs. The dome strainer provides drainage even when partly covered.

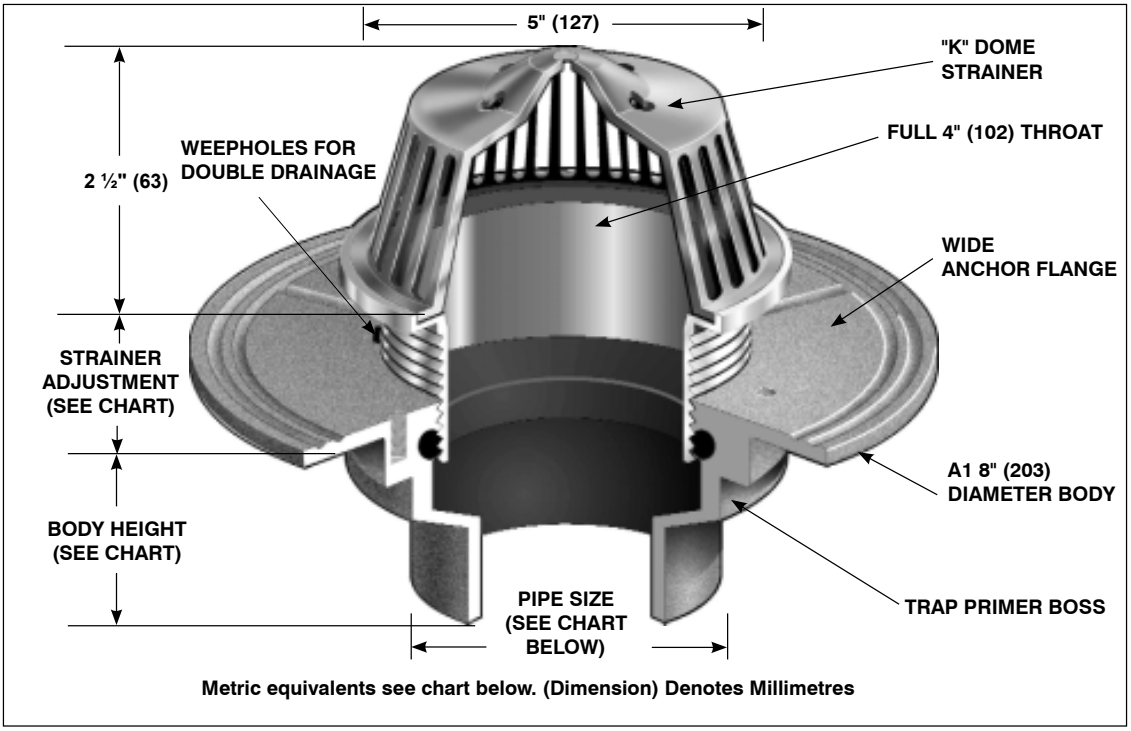


**Metric equivalents see chart below. (Dimension) Denotes Millimetres**

**PARTS:**

A1 BODY

K-(*)
(*) Denotes Strainer Finish (-1 or -3)

**F1100-K Series meets ANSI-ASME floor drain standard A112.6.3-2001**

| STRAINER SIZE | STRAINER ADJUSTMENT | | ANSI/ASME RATING | PIPE SIZE | BODY HEIGHT | | | | |
|---|---|---|---|---|---|---|---|---|---|
| | MIN | MAX | FREE AREA | | NO HUB (STANDARD) | PUSH ON (P) | THREADED (T) | INSIDE CAULK (X) | PVC/ABS (-30)/(-31) |
| 5" (127) ○ | 1/2" (13) | 1 1/2" (38) | 15 in² (9677²) | 2" (51) ○ | 3" (76) ☐ | 3 3/8" (86) ☐ | 2 1/4" (57) ☐ | 3 3/4" (95) ☐ | 2 15/16" (75) ☐ |
| | | | | 3" (76) ○ | 3" (76) ☐ | 3 3/8" (86) ☐ | 2 5/8" (67) ☐ | 3 3/4" (95) ☐ | 3 3/4" (95) ☐ |
| | | | | 4" (102) ○ | 3" (76) ☐ | 3 3/8" (86) ☐ | 2 5/8" (67) ☐ | 3 3/4" (95) ☐ | 3 3/4" (95) ☐ |
| | | | | 5" (127) ○ | 3" (76) ☐ | -- ☐ | 2 5/8" (67) ☐ | 3 3/4" (95) ☐ | -- ☐ |
| | | | | 6" (152) ○ | 3 1/4" (83) ☐ | 6 1/2" (165) ☐ | -- ☐ | -- ☐ | -- ☐ |

| SUFFIX | OPTIONAL VARIATIONS |
|---|---|
| ☐ -1 | Nickel bronze strainer |
| ☐ -3 | Stainless steel strainer and funnel |
| ☐ -5 | Sediment bucket |
| ☐ -6 | Security screws (T-20 Torx & pin) |
| ☐ -7 | 1/2" trap seal primer connection |
| ☐ -8 | Backwater valve (2", 3", 4") |
| ☐ -11 | Acid resistant epoxy coated body |
| ☐ -13 | Galvanized body |
| ☐ -15 | Extension |
| ☐ -21 | Secondary flat stainless steel strainer (2", 3", 4") |
| ☐ -28 | Stainless steel body (Type 304) |
| ☐ -30 | PVC socket connection body |
| ☐ -31 | ABS socket connection body |
| ☐ -34 | Closure plug |
| ☐ -40 | Underdeck clamp |
| ☐ -41 | Sump receiver |

| SUFFIX | OPTIONAL VARIATIONS |
|---|---|
| ☐ -49 | Chrome plated strainer assembly |
| ☐ -50 | Lacquered cast iron dome |
| ☐ -83 | Stainless steel mesh screen over dome |
| ☐ -90 | Threaded side outlet (2", 3", 4") (cast iron only) |
| ☐ -90NH | No hub side outlet (2", 3", 4") (cast iron only) |
| ☐ -95 | Client logo |
| ☐ -BA | Minimum 51% material cost made in the USA |
| ☐ -C | Membrane clamp for low rough-in (min. 1/2" (13)) |
| ☐ -C2 | High rough-in membrane clamp (min. 1 9/16" (40) |
| ☐ (Standard) | No hub outlet |
| ☐ -MG | MI-GARD Floor Drain Trap Sealer (2", 3" or 4") |
| ☐ P | Push on outlet |
| ☐ -PA | Pennsylvania Steel Act compliant product |
| ☐ T | Threaded outlet (2", 3", 4") |
| ☐ X | Inside caulk outlet |
| ☐ -Z | Extended wide elastomeric flange |

CALIFORNIA PROPOSITION 65 WARNING. This product contains chemicals known to the State of California to cause cancer and birth defects or other reproductive harm.

Job Name: _____ Page No: _____

Section No: _____ Contractor: _____

Schedule No: _____ Purchase Order No: _____

MIFAB *reserves the right to make changes in material and design without formal notice and obligation.*

**USA: 1-800-465-2736 www.mifab.com CAN: 1-800-387-3880**